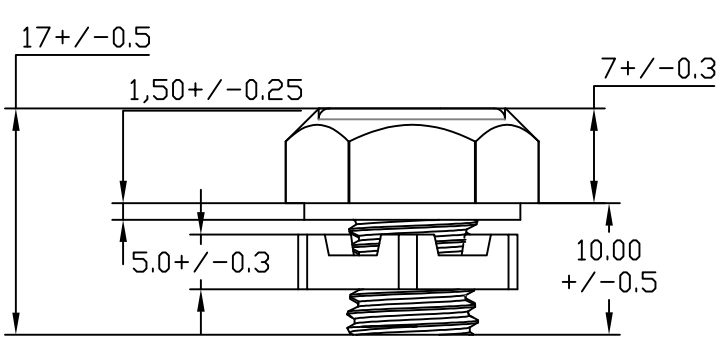

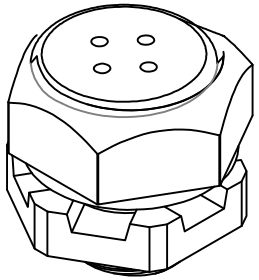

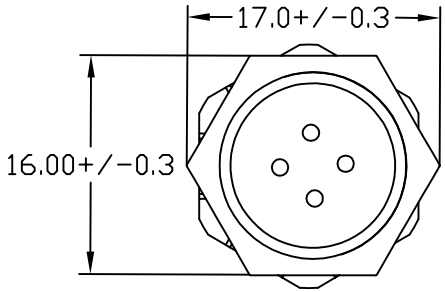

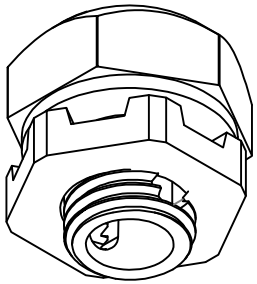

Note:
Color:Black
Material:PA6
GASKET MATERIAL:SILICONE SHORE A 50
Temperature Range:-45°C~125°C
IP66,
Drain Speed:Typical @ 15min for 1L
Torque:0.7kgf.cm

PRODUCTION
DATE 28/08/25
APPROVED BY

REV	Modification	people	date

DIM Range	Metal/Plastic	Dimension Range	OTHERS
>0~15	± 0.1		
>15~50	± 0.15	>0~15	± 0.5
>50~100	± 0.25	>15~30	± 1
>100~200	± 0.4	>30~100	± 1.5
>200~400	± 0.6	>100	± 2
>400	± 1	?? .????????	

Shenzhen Milvent Technology Co.,Ltd		Name	Drain Plug Low Profile m12x1.5-10mm
DRW/DATE	LI BEN 2025/08/28	P/N	MIV-12DPB-4h-7Head-1.5Gsk
Review/Date	Yan 2025/08/28	Rev.	V:3
Check/Date	TAO LI 2025/08/28	Material	Plastic
Approval Date	Deng Kai 2025/08/28	DRW No.	2025-1829-20
Scale	3:1		
Weight	KG		