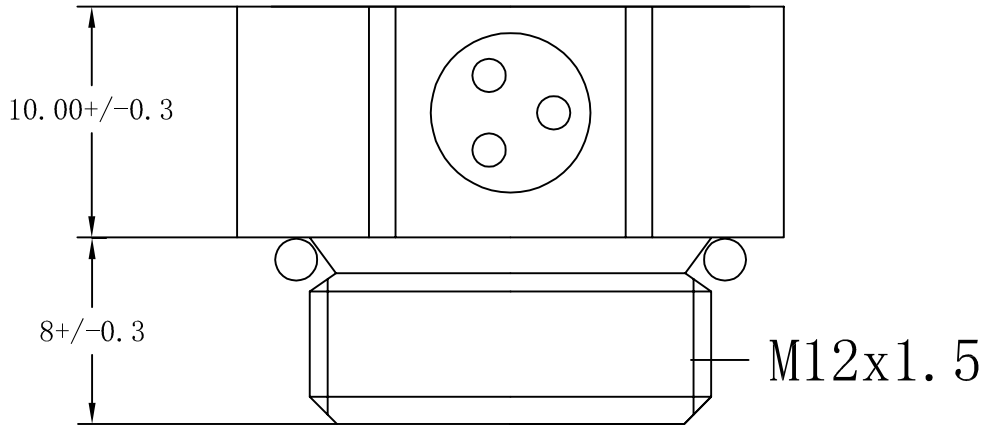

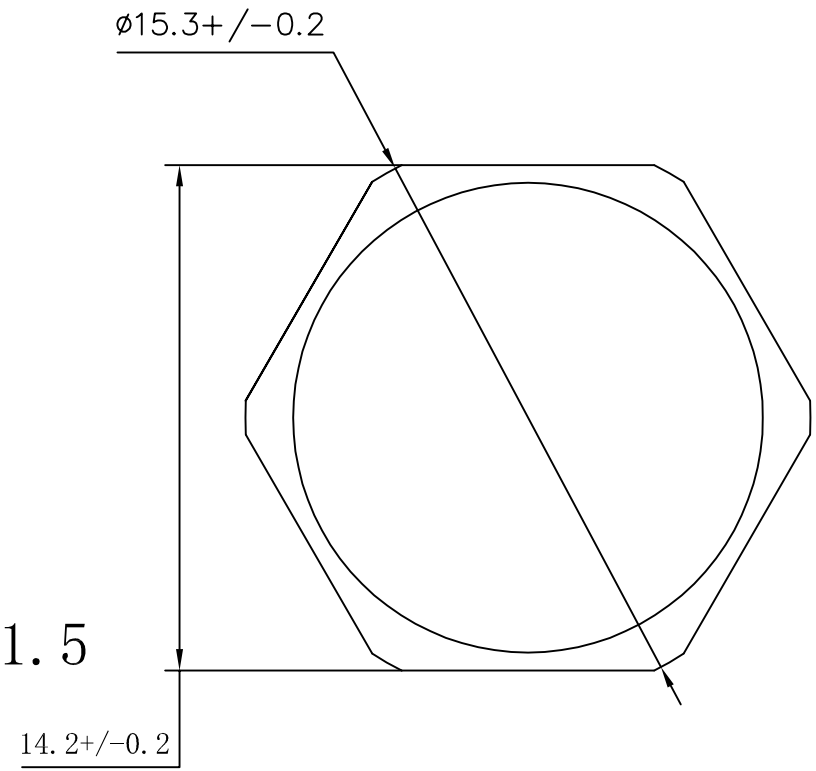

Note:
Color:AL natrual
Material : Aluminum
Airflow :>25L/h@7kpa;Open Valve for higher pressure>100mbar
O-ring Material: NBR Shore A70:14X10X2mm
Torque Data 扭力：0.5~0.7N.m
Oleophobicity:8 rating

REV	Modification	people	date

DIM Range	Metal/Plastic	Dimension Range	OTHERS
>0~15	±0.1		
>15~50	±0.15	>0~15	±0.5
>50~100	±0.25	>15~30	±1
>100~200	±0.4	>30~100	±1.5
>200~400	±0.6	>100	±2
>400	±1	螺纹.材料厚度按标准做	

Shenzhen Milvent Technology Co.,Ltd				Name	AL M12 BREATHER WITH VALVE
DRW/DATE	LI BEN2020/05/28			P/N	MIV-12MAS-2DH-SV-L
Review/Date	Qu Yan2020/05/28			Rev.	V：0
Check/Date	TAO LI2020/05/28	Scale	3:1	Material	Aluminum
Approval Date	Deng Kai2020/05/28	Weight	KG	DRW NO.	2022-0528-19