Camera Stabilizer MASTER

User Manual

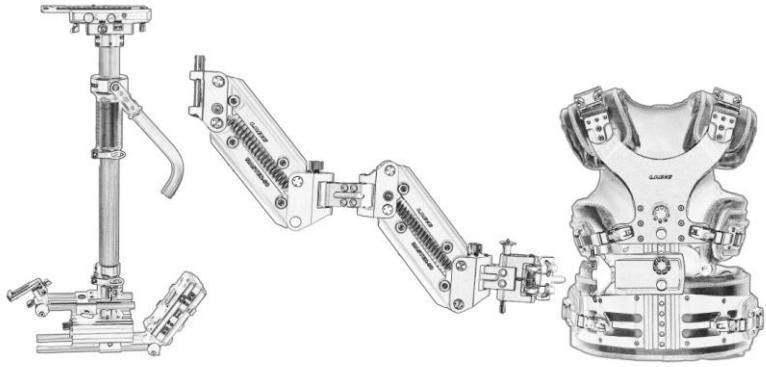



Quick search keywords

PDF electronic documents can use the search function to search for key words. For example, in Adobe Reader,Windows users can use the shortcut key Ctrl+F, and Mac users can use Command+F to search for keywords.



Click the Catalog to jump

Users can understand the content structure of the document through the catalog ,and click on the title to jump to the corresponding page.



Print document

This document supports high-quality printing.。

Read tips

Instructions for using the product

Please read the following documents carefully to fully understand, reasonably and safely use Master。

- 《Master Item List》
- 《Master User Manual》
- 《Master Disclaimer And Safe Operation Guidelines》

Please check all the items in the Master package according to the <Item List>. Please read the <User Manual> carefully and
Watch the instructional video on the Master product page of the official website http://www.szlaing.com. Read the <Disclaimer and Safe Operation Guidelines> carefully to understand your legal rights and responsibilities. If you have any questions or problems in the process of installing, using or maintaining Master,Please contact Luanyi and its authorized agents.

 2021 LAING All right

Catalog

Read Tips

Instructions for using the product 1

Product description 3

Brief introduction 3

Parameter 4

Item list 5

Know Master 6

Vest 6

Arm 7

Sled 7

Sled function overview 8

Vest function overview 9

Arm function overview 9

Preparation 14

Install the docking bracket 14

Install battery and monitor 14

Install the camera 15

Adjust Balance 16

Preparation for adjustment 16

Static balance adjustment steps 16

Dynamic balance adjustment steps 16

Wearing of the vest 17

Wearing steps 17

Install and remove of the arm 17

Installation and debugging steps 17

Precautions for use 18

Maintenance 18

 2021 LAING All right

Product description

Brief introduction
The camera stabilizer was invented by the American Garrett Brown in the early 1970s. As the name implies, it can provide a strong guarantee for high-quality images while moving.
The LAING series of Steadicam camera stabilizers, relying on improved technologies and designs, can smooth the jitter that is difficult to control during the shooting process, make you to take high-quality, jitter-free pictures during moving.

Features
Master is a universal modular mechanical camera stabilizer with simplicity and reliability, a wide range of parameters, universal interface design and excellent performance after multiple iterations to meet your high-quality needs for film and TV production.

Structure
Steadicam is mainly composed of three parts, that is shock-absorbing arm, sled and metal vest. The shock-absorbing arm isolates the photographer from the camera, so that the vibration generated by the movement is absorbed by the spring to reduce the up and down vibration of the camera. The sled can effectively reduce the shaking of the camera. The vest is the fulcrum of the stabilizer's work.

The sled consists of a top stage, gimbal handle, bottom mounting components (counterweight battery), monitoring components (monitor, remote control circuit) and telescopic poles. Wear the vest while using, so that the entire support point is basically on the shoulder and waist; then install the camera extension on the top stage, connect the power supply and remote control line after putting the camera on, and adjust the balance.

 2021 LAING All right

Parameter Master

Items	Parameter（Inch）	Parameter（Metric）
Arm adaptation	8.8-50.6 lb.	4-23kg
Arm lifting range	29.3 inch	750mm
Arm weight	11.22lb.	5.1kg
Arm pin diameter	0.63inch	16mm
Vest weight	10.34lb.	4.7kg
Vest bust	29.5-57.08inch	750-1450mm
Vest waist	31.1-57.87inch	790-1470mm
Sled Weight	9.68lb.	4.4kg
Dovetail plate size	7.9x2.6x0.35inch	200x65x9mm
Top stage Size	6.1x3.5inch	155x89mm
Central connecting rod diameter(outer)	1.57inch	40mm
Central connecting rod diameter(inner)	1.4inch	35mm
Min.height of overall stretch	27.2inch	690mm
Max.height of overall stretch	42.9inch	1100mm
Camera mounting hole	1/4inch 3/8inch	
Sled handle hole	0.63inch	16mm
Counterweight	2.2 lb.	1kg (4*0.25kg)
Product net weight	33.44 lb.	15.2kg
Package size	34.3x20.5x13.8inch	870x520x350mm
Gross weight	68.2 lb.	31kg

 2021 LAING All right

【Item List】

Product name	Camera Stabilizer		Model	Master	
Quantity	1 set				
No.	Part name	Unit	Quantity	Notes	Standard/optional
1	Vest	set	1		Standard
2	Sled	set	1		Standard
3	Arm	set	1		Standard
4	Docking bracket	set	1		Standard
5	Damping arm connector	set	1		Standard
6	Accessories	set	1	1. 6MM hexagon wrench (for adjusting the arm) 1pc, flat-head/cross screwdriver 1pcs 2.Screw:3/8x2,1/4x2,M6X60mmx2 3. Power: D-TAP to D-TAP,2pcs BNC video cable: 3GSDI to 3GSDI 2pcs 4. Counterweight: 0.25kgx4 pcs 5. Pole ZJG05 2pcs	Standard
7	Packing box	pcs	1	Safety protection aluminum box	Standard

 2021 LAING All right

Know Master

Vest



1. Shoulder buckle
2. Shoulder pads
3. Chest plate
4. Chest pads
5. Chest buckle（Chest relax/tight）
6. Length fix button（Adjust length）
7. Length button
8. Bridge board fixing knob
9. Bridge plate knob
10. Connector with arm
11. Bridge plate
12. Waist pad
13. Waist buckle（Waist relax/tight）
14. Front and rear fine-tuning knobs for arm
15. Vertical board

16. Cross back strap
17. Lumbar pad



2021 LAING All right

Arm

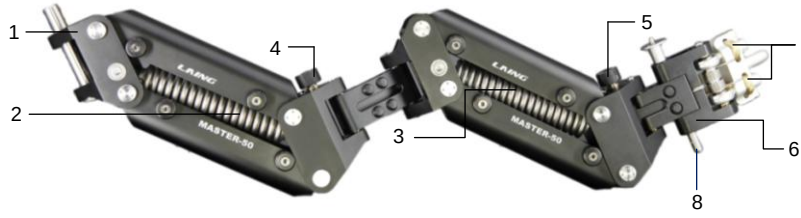

1.Arm post（Connect with sled）
2/3 . Titanium spring (light weight, strong rigidity)
4.Forearm adjustment knobs (adjust spring force according to different weight)
5.Rear arm adjustment knobs (Adjust spring force according to different weight)
6. Damping arm connector
7.Arm left and right fine-tuning nut (adjust the left and right)
8.Pole

Sled



1. 200mm dovetail plate
2. Top stage
3.Nosebox（Camera power box video connection）
4.Gimbal
5.Handle
6.40mm carbon fiber tube (modular design at the end to make the system maintenance and upgrade faster and easier)
7. Upper and lower pipe clamps (fix the inner and outer pipes)
8.Monitor bracket (adjust angle)
9.Bottom (monitor power supply, accessory power supply and video connection)
10.Battery bottom bracket (adjust angle to meet user's demand, the rod can be extended to increase the inertia of panning)

 2021 LAING All right

Sled function overview

Top Stage



1.fore and aft adjustment knobs(fine-tuning)
2.Left and right adjustment knobs(fine-tuning)
3. Anti-dropping pin (to prevent the camera from falling off accidentally)

Notes

The dovetail plate must be installed into the stage in the direction of the arrow.Do not press the anti-dropping pin before clamping he dovetail plate.



4/5. Horizontal locking knobs (double knob design)
6. Clamping rod (safety lock with drop assist Gauge, adjustable tension without gasket)



Front and back/left and right adjustment: Turn the knurled knob marked Fore/Aft clockwise to move the camera dovetail back.Turn it counterclockwise to move forward. (Before insert the dovetail board, set the clamping lever to the unlock position. after the adjustment is completed, set the clamping lever to the lock position.) Turn the knurled knob marked R/L clockwise to move the camera dovetail plate to the left . Turn it counterclockwise to move it to the right. (Before adjustment, the horizontal locking button needs to be loosened, while completion must be locked)

Nosebox（Left and right interfaces）



1/3. 3GSDI port (HD video interface)
2/4.D-TAP port (power interface)

 2021 LAING All right

Gimbal



1. Bearing fixing ring (inner and outer ring easy to maintain and dustproof)
2. Gimbal bracket
3. Gimbal handle
4. Gimbal armrest
5. Clamping rod
6. Clamping force adjustment screw

To modify the position of the gimbal on the center rod, the clamping lever must be opened.

Notes
Only when the sled is docked on the stand or in a horizontal position,can the clamping lever be opened.

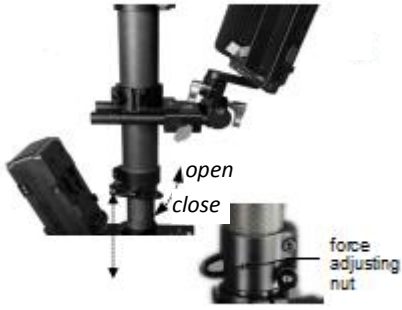

If the lower rod slides up or down, please loosen the upper and lower rod pipe clamps first

Notes
clamping force must be appropriate, in case that when the clamping rod is closed, the clamping force is too large to make the lower rod slide not smoothly or even get stuck.

Bottom

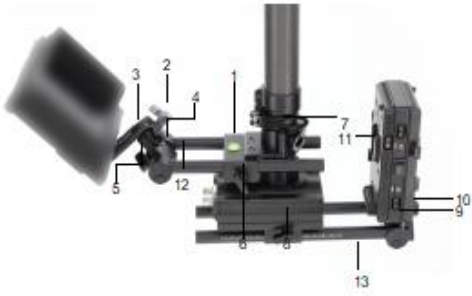

1. Horizontal bubble (backlight, high precision)
2. Bracket clamping knob
3. Monitor bracket (rotatable and movable)
4. Monitor shaft (can be rotated 180 degrees)
5. Monitor shaft locking button
6. Monitor bracket lever lock button
7. Post clamp
8. Battery holder lever lock button
9. Battery holder shaft (can be rotated 180 degrees)
10. Battery holder shaft locking button
11. V type gusset seat
12. Monitor bracket rod
13. Battery holder rod

 2021 LAING All right

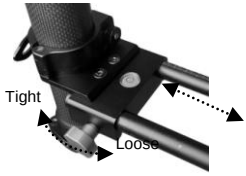

Move the monitor, please loosen the monitor Bracket lock knob to move monitor bracket, re-lock to fix it.



Fine-tune the monitor angle, please loosen the rod locking knob and re-lock it to fix the monitor.



Rotate the monitor, please loosen the bracket clamping knob and re-lock it to fix the monitor.

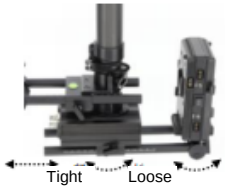

Move the battery holder, please loosen the battery rod locking knob and slide(The battery holder can be removed), re-lock and fix the battery holder.Spin the battery holder, please loosen the battery holder shaft locking knob.

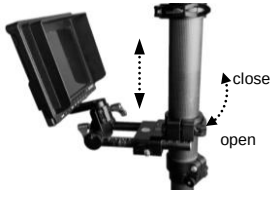

The monitor bracket slides up or down, please support the monitor first and loosen the post clamp.

 2021 LAING All right

Electronics box



1. Double D-TAP interface (power interface)
2. Dual 3GSDI interface (HD video interface)
3. Counterweight connection thread

Battery box



4.D-TAP power interface(stabilized voltage)
5. Power indicator
6. Toggle switch
7. Power indicator
8. D-TAP power connector(stabilized voltage)
9. Battery direct output port

The standard configuration is 12V: 4 and 8 interface stabilized voltage output 12V
Select the configuration as 24v/12v: 4-port stabilized voltage output 12V, 8-port stabilized voltage output 24V. (Note: if 24V power supply is required, two 12V batteries must be installed at the same time)

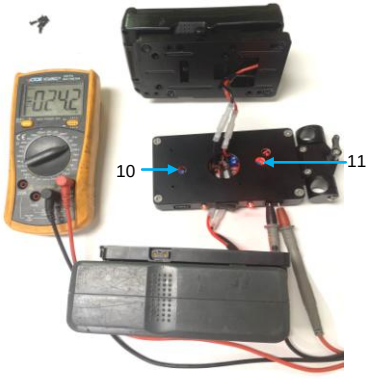

10. 12V power output voltage regulating knob

11. 24V power output voltage regulating knob

Notes
The built-in adjustable step-down module has the function of voltage stabilization and can also reduce the voltage according to the demand (if the voltage needs to be adjusted, the battery box needs to be disassembled)

 2021 LAING All right

Docking bracket



1. Docking bracket plate
2. Anti-drop pin
3. Chain
4. Balance pin
5. Balance bar
6. Balance bar lock screw
7. Bolt lock screw

Bracket Assembling

The bracket connector is designed for brackets with 15.9 mm sockets. Place the docking bracket on the bracket pin and tighten the horizontal bracket locking screw accurately.

Notes
• Only suitable for steel brackets, such as C-shaped brackets or low brackets, and use sandbags to prevent the brackets from tilting. • Make sure that the stand is flush with the surface. • Make sure that the socket locking screw is fully tightened.

2021 LAING All right

Vest function overview

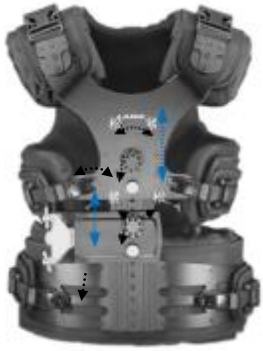

Loosen the length fixing knob on the breastplate, pull the length knob, the breastplate can be moved up and down. Loosen the fixing knob of the bridge board, pull the knob of the bridge board, the bridge board can be moved up and down.

The chest buckle and waist buckle are just fine adjustments, firstly, you should pull the chest pad and waist pad to suitable tightness ,then press the chest buckle and waist buckle.

When the vest is worn on the body, the shoulder and chest should not be too tight, and it comfortably fits the body.
The waist pad must be stuck on the hip bone of the body, and it must be close to the bod,.no gap.



The front and rear fine adjustment knobs and the left and right fine adjustment nuts on the arm can adjust the angle of the arm to the vest, from side to side, also to the inside and outside. The inside and outside are controlled by two thumbscrews which are pressed on the connecting seat of the arm.

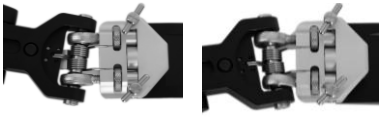

Two nuts on the arm are used for side-to-side adjustment。

Arm function overview



Front



Rear

Adjust the lifting capacity of the arm. The arms of different stabilizers will be different load-bearing capacity. Each arm is designed for a specific weight range of the camera. Change a different camera or
add and remove an accessory, the lifting capacity of the arm must be adjusted.
The front/rear adjustment knob on the arm can control the lifting capacity.



Regulating screw



Adjusting wrench

Spring tension adjustment of front and rear arms: turn the wrench clockwise to increase the tension, and vice versa.

 2021 LAING All right

Preparation

Install the docking bracket

The docking bracket is used to place and support the sled and arm.

The installation steps are as follows：

1. Open the bracket and place it on the ground, then put the docking bracket on the bracket pin, and tighten the locking screw, install the M6*60mm screw on the docking bracket.
2. Take out the sled and place it on the docking bracket pallet, and hang the arm on the M6 screw。





Install battery and monitor

The installed battery and monitor are optional accessories (you need to purchase them), please confirm whether these items are included in your configuration.





1. Align the V-shaped plug on the bottom of the battery with the V-shaped slot on the gusset, and then push it in with a little force.
2. Align the screw hole at the bottom of the monitor with the monitor interface screw at the bottom of sled, then tighten it to fix it.

.

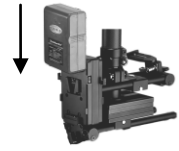



 2021 LAING All right

Master's "dual dynamic balance" extended range, combined with the monitor stand,allows to install batteries and monitors in independently adjustable positions.





Advantages as below:

- Sufficient counterweight
- The position of the counterweight (monitor and battery) can be easily adjusted
- The display and battery can move independently of each other
- When the system is balanced, the batteries can be moved and placed independently of each other.
- By moving the display and battery to the correct position, you can easily set up the camera and weight distribution.





This flexible adjustment ensures that you always have enough battery power,The multi-function positioning of the battery achieves perfect dynamic balance.

Install the camera

The camera is mounted on the top stage of the sled

1. Open the clamping lever, press the anti-falling pin, and take out the dovetail plate.
2. Lock the dovetail plate on the bottom of the camera, then put the plate back on the top stage and lock the clamping lever.









3. Connect the video cable and camera power supply cable

Two basic methods for assembling:

High mode

The camera is mounted on the top of the sled. The height of the camera lens can be anywhere from the operator's hop to up over his head. High mode is most commonly used.

Low mode

Here, the sled is turned upside down. The camera is mounted right side up via a special bracket. The typical height of the lens is between the operator's waist and his knees. Super low mode gets the lens on the floor.

Two basic operating positions:

Missionary

When the operator is in Missionary the camera is facing the same direction as the operator. The monitor is to the operators front; the battery is to the rear. Missionary is an arc from the camera pointing straight ahead to looking across the operator's body.

Don Juan

When the camera Is pointed behind the operator, we say he Is in Don Juan. The monitor is to the operator's rear; the battery is to the front. Don Juan includes an arc as the camera looks to the side away from the arm and pans to the rear.

 2021 LAING All right

Adjust Balance

In order to achieve the ideal effect for the stabilizer, balance adjustment is essential. Precise balance will directly improve the quality of the picture.The stabilizer should achieve static balance and dynamic balance before shooting.

Balance adjustment preparation

1. After the camera is installed, please connect the SDI video cable and the power supply cable of the camera first, install the follow focus and connect the power supply port before balance adjustment.
2. Before balance adjustment, you need to remove the lens cap and insert the memory card,complete all the connections to ensure that the camera is fully prepared for shooting,otherwise, it will affect the balance effect.
3. In the process of balance adjustment, make sure that the power of the camera is turned off.

Static balance adjustment steps

A rig in static balance will hang by the gimbal at a particular attitude:usually upright and with the post vertical .The three components of static balance are in the three axes: fore and aft, side to side, and top to bottom.

1. Place the monitor where you can comfortably see it.
2. Move the gimbal up or down depending on the camera weight.
3. Move the battery in and out until the device hangs vertically.
4. Drop test. Perform this test by keeping the stand level, letting go, and calculating the time it takes from the bottom of the equipment to pass through the vertical. At the beginning, try to reach a landing time of 2-3 seconds. If the equipment drops too fast, the gimbal needs to be lowered. If the equipment fall speed is too slow, the gimbal needs to be risen and increase the equipment bottom weight . (Note: When you loosen the clamping rod of gimbal, the equipment must be level.)
5. Achieve balance by fine-tuning the front and rear/left and right adjustment knobs.

Dynamic balance adjustment steps

Equipment in dynamic balance can be horizontal hunting. Regardless of the rotation speed, the support rod will remain vertical. Dynamic balance equipment is static balanced, but completely static balance equipment may not be in dynamic balance. Only the spin balance can be detected whether the equipment is in dynamic balance.

1. All elements (cameras, monitor and batteries/electronics) must be arranged be lined up on the same vertical plane.
2. To start, the rig must be in static balance, with a drop time of 3 seconds or more.
3. Rotate the equipment by itself, if it rotates smoothly, the equipment is in dynamic balance, if not, go to the next step.
4. Move the battery in or out about 1/2 inch. Adjust the static balance of the camera and spin again.
5. If it still does not work, move the battery in the opposite direction, 1/2 inch away from the original position. If it is better, move the battery 1/4 inch in the same direction. Adjust the static balance of the camera.
6. Repeat the above steps until the rig pans flat.

 2021 LAING All right

Wearing of the vest

The vest needs to fit like a second skin, with no gaps between the shoulders and the shoulder pads, the chest pads should cover the thick ribs, and the waist pads are concentrated on the hip bones. The vest is in good condition, fits tightly, and can get feedback in time from the equipment,that will help you adjust your posture to balance the equipment.

Wearing steps

1. Loosen all straps, including cross straps. Open the left side of the vest-the buckles on the shoulders, chest, waist.
2. Take the vest off from your right shoulder, fasten the left shoulder buckle.
3. Pull the vest down so that it fits tightly on your shoulders. Keep the board vertical.
4. Fasten the chest strap close to your ribs.
5. Pull the vest down on your shoulders.
6. Fasten the buckle on the lower left, adjust the waist pad. Your hip bone should be directly behind the waist pad. If the vest is too long or too short, you can adjust its length by releasing the lock button on the breastplate and then moving the vertical plate up and down.
7. Fasten the chest button and waist button on the front of the vest.
8. Connect and tighten the cross straps on the back of the vest. They are used to prevent slippage of the vest and ease some side shifts of the equipment.

Note: Everyone's figure and body shape are different. You may need to adjust further to make the vest fit you closely. You can add or remove the filling at will, lengthen or shorten the strap.

Install and remove of the arm

The arm connector is the interface between the arm and the vest.

Installation and debugging steps

1. Insert the arm connecting plug into the socket on the vest.
2. Using the front and rear fine-tuning knobs of the arm to fix the arm in place. When the top screw is turned inward, the angle of the arm is pulled towards to the photographer. The top screw is screwed out, the equipment tends to drop away from the photographer.
3. Using the left and right fine-tuning knobs of the arm to adjust the arm laterally. If the equipment fall to the left, unscrew the top screw (turn the nut counterclockwise). If the equipment fall to the right, screw in the top screw (turn the nut clockwise).
4. Put the handle of the gimbal on the arm, then adjust the tension of the part (forearm) of the arm which is close to the gimbal. Adjust the forearm knob, but only when the front and rear arms are slightly upward, the adjustment knob can be easily turned. For more force, twist to the right (tighten); for less force, twist to the left (loosen). Then adjust the part of the arm near the vest (the back arm) in the same way. Finally, find the right strength so that the back arm can "follow" the forearm when you are up and down.

Notes
If you find the rear arm is following, and then suddenly "cocked" up and down (that is, across the center), it may be caused by your posture, rather than a problem with the arm. Readjust your posture, relax, and then try to go up and down. This usually solves the problem.

 2021 LAING All right

Precautions for use：

Safe Use

1. Before using the equipment, check the screws of each connection position are loose or abnormal, and make sure the problem is eliminated before using.
2. Training or shooting difficult actions requires the help and cooperation of an assistant.
3. When shooting on a moving vehicle, please fasten your seat belt and wear appropriate personal protective equipment.
4. Avoid to use the equipment while running on ice and soft sand.

Maintenance

1. After using, the equipment should be disassembled and put it into the box and locked, and placed in a cool and dry place. Don't put it any where in case that accessories lost or bumps, affect the use of equipment.
2. Do not place the device in a humid environment or in the hot sun, which will easily deform and damage the internal precision parts.
3. The equipment connection, top stage and component installation place should be kept clean. If there is debris or oil residue on the connection of the equipment, after disconnecting the power, wipe it with a damp cloth dampened with a neutral detergent. Do not wipe with a rough surface or corrosive detergent or scrape with a knife to avoid damage the protective layer of the surface.
4. Grease to the rotating part of the gimbal and arm regularly for maintenance.

Product after-sales service

1. All products sold by our company will provide free installation instructions
2. Luanyi brand film and television equipment products provide three-year warranty and lifetime maintenance services
3. During the warranty period, non-man-made faults can enjoy free warranty and replacement, and the replenishment time is guaranteed within 15 days
4. During the warranty period, if the product needs to be repaired due to man-made damage, the product can be sent back to the manufacturer for repair, repair fees is free, only the cost of the accessories is charged, and the freight out and home will be on buyer's charge.

 2021 LAING All right

This manual is subject to update without notice.

You can check the latest version of "User Manual" on the official website of Luanyi

http://www.szlaing.com

2021 LAING All right