LAING®
CAMERA STABILIZER SYSTEMS

Camera Handheld PTZ-FALCON PTZ

User Manual



Quick search keywords

PDF electronic documents can use the search function to search for key words. For example, in Adobe Reader,Windows users can use the shortcut key Ctrl+F, and Mac users can use Command+F to search for keywords.

Click the Catalog to jump

Users can understand the content structure of the document through the catalog,and click on the title to jump to the corresponding page.

Print document

This document supports high-quality printing

© 2021 鸾翼科技 版权所有

Read tips

Instructions for using the product

Please read the following documents carefully to fully understand, reasonably and safely use FALCON PTZ。

- 《FALCON PTZ Item List》
- 《FALCON PTZ User Manual》
- 《FALCON PTZ Disclaimer And Safe Operation Guidelines》

Please check all the items in the FALCON PTZ package according to the <Item List>. Please read the <User Manual> carefully and Watch the instructional video on the FALCON PTZ product page of the official website http://www.szlaing.com. Read the <Disclaimer and Safe Operation Guidelines> carefully to understand your legal rights and responsibilities. If you have any questions or problems in the process of installing, using or maintaining FALCON PTZ,Please contact Laing and its authorized agents.

2021 鸾翼科技 版权所有

Contents

Read Tips 1
Instructions for using the product 1
Product description 3
Brief introduction 3
Feature 3
Parameter 4
Function Highlights 4
Item list 4
Know FALCON PTZ 5
Handheld PTZ 5
Preparation 6
Install the adjustment bracket 6
Assemble the handheld PTZ 6
Place the PTZ on the adjustment bracket 7
Install the camera 7
tilt axis adjustment 8
Adjust Balance 9
Preparation for adjustment 9
Tilt axis adjustment steps 9
Roll axis adjustment steps 10
Precautions for use 11
Safety Use 11
Maintenance 11
After-sales service 11

© 2021 鸾翼科技 版权所有

Product description

Brief introduction

FALCON PTZ combines the advantages of Steadicam. The handheld mode is more flexible, direct, fast and precise than Steadicam to control the camera.
FALCON PTZ is a new type of three-axis zero-gravity gimbal,designed for handheld shooting. It has three free angles of pan,tilt and roll axis, retaining the flexibility of handheld control mode and thestability of the Steadicam arm, but the load is only half of Steadicam. You can also choose the Easyrig hanger method to make shooting creation more convenient.

Features:

1. Zero-gravity gimbal control precision
2. Three-axis motion isolation, can independently control the pan, tilt and roll
3. Adapt to small and large cameras
4. Seamless switching between mobile shooting and fixed-camera shooting
5. Reduced physical fatigue
6. Simple and convenient installation and debugging
7. Standard interface 5/8 suitable for all Stability module
8. Steadicam and Easyrig can be used

© 2021 鸾翼科技 版权所有

Parameter

Weight capacity	35kg
Pan	360°
Tilt	90°(based on camera length)
Roll	25° from center
Mounting Hole:	5/8” (PRO), 3/4” (Tiffen) arm posts with adapter slee veor any 5/8" pin
Mounting plate:	**ARRI** Bottom Dovetail Plate (**K2.0015896)/Standard**
Dimensions:	600mm x 450mm x 195mm
Net weight:	5.2 kg
Packing size:	570mm x 465mm x 235mm
Gross weight	12 kg

Function Highlights

Brake and damping adjustment	Pan/Tilt
Center Position Locking Pin	Roll
Drop rate adjustment:	the center of gravity can be adjusted up and down while working
Bottom	Reversible
Handle	Removable & interchangable with knobs included

Item List

Product Name	FALCON PTZ		**Model**	FALCON PTZ	
Quantity	1 Unit				
Item	**Part Name**	**Unit**	**QTY**	**Notes**	**Standard/option**
1	Handheld PTZ	set	1		Standard
2	Adjusting bracket	set	1		Standard
3	Dovetail Plate	pc	1		Standard
4	Ring	pc	1		Standard
5	Arm post adapter	pc	1		Standard
6	T-type spanner	set	1		Standard
7	Spare screw	set	1		Standard
8	Protective box	pc	1		Standard

© 2021 鸾翼科技 版权所有

Know FALCON PTZ

Handheld PTZ

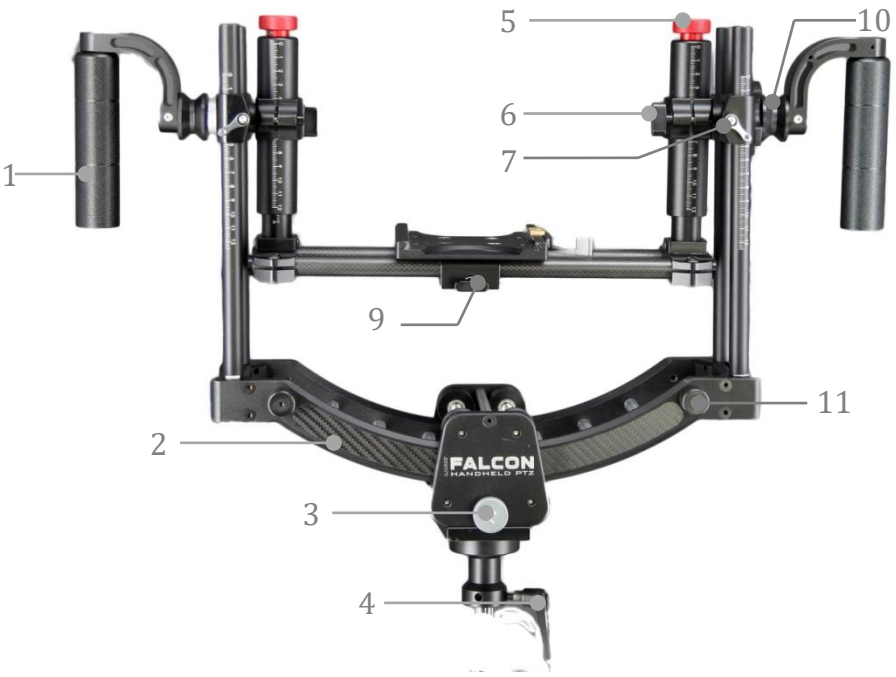

1.Handle

2.Track

3. Horizontal adjustment fixed button

4. Arm pin locking screw

5. Lifting adjustment button

6. Lifting fixed button

7. Tilt fixed button

8.Plate locking

9.Base fixed button

10. Bracket bearing

11.Tilt limited block





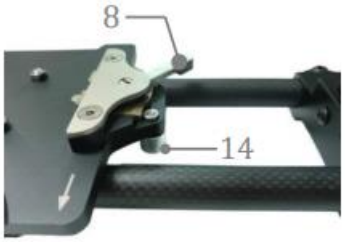

12. Roll positioning button

13. Tilt damping adjustment button（also can lock tilt）

14. Anti-dropping pin for the plate

© 2021 鸾翼科技 版权所有

Preparation

Install the adjustment bracket

The adjustment bracket is used to place and support the handheld PTZ, which is convenient for the connection between handheld PTZ and Steadicam arm.

The installation steps are as follows:

1. Install the bottom plate of the adjusting bracket to the tripod

2. Install the two support post on both sides of the bottom plate, and the reference lines should be aligned (the thickness of the reference lines of the two support post are inconsistent, so don't install it wrong).





Assemble the handheld PTZ

1. The handheld PTZ is separated into several parts and placed in the protective box, as shown in the picture, and needs to be assembled before use.

2. Take out the component 1 and place it on the tripod, respectively take out 2 (4 posts) and insert them into 1, insert them to the mark, and tighten the screws on both sides.



© 2021 鸾翼科技 版权所有

3. Take out the part 3 to unfold the handle, loosen the tilt axis fixing button, insert it as shown in the picture, and then lock the tilt axis fixing button.

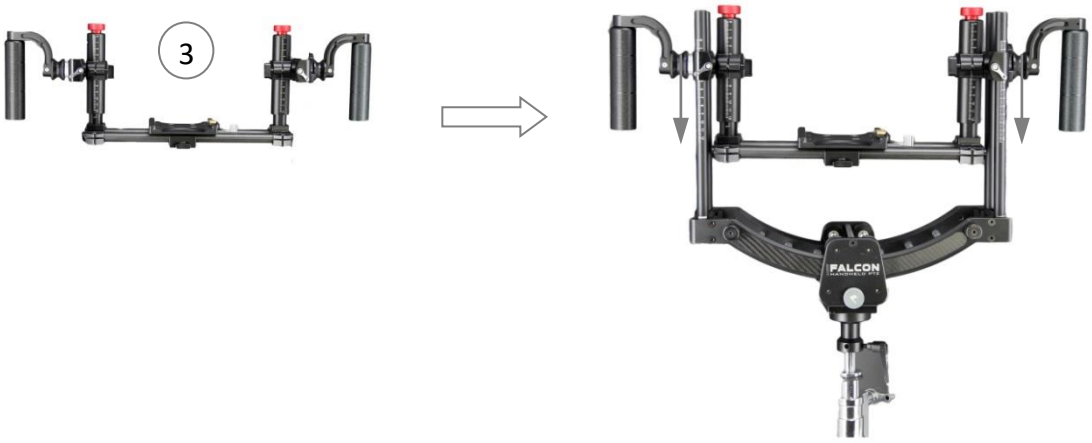

Place the PTZ on the adjustment bracket

The tilt/roll/horizontal axis should be locked after the handheld PTZ is assembled, and the three-axis mechanical lock position is shown as the picture.



Install the camera

FALCON PTZ is available for the most of majority of cameras on the market

Installation steps

1.Firstly, take out the plate and select the corresponding camera fixing screw (camera fixing screw 3/8"-16 or 1/4"-20),install the plate at the bottom of the camera. Adjust the position of the plate according to the center of gravity of the camera. For example, if the center of gravity of the camera lens is forward, the bottom plate will be Installed with the long side facing forward.

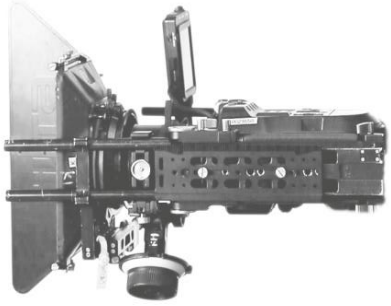

© 2021 鸾翼科技 版权所有

2. The dovetail lock system is designed to ensure reliable camera security. When installing the camera, always hold the camera with at least one hand until it is firmly fixed. To install the camera to the PTZ, follow the steps below:

a. Open the plate lock which is on the side of the camera mounting base. (As shown in Figure 1)

b. Place the plate against the passive side of the PTZ, place your hands on the camera, and tilt the plate into the dovetail lock. (As shown in Figure 2)

c. The weight of the camera will press the dovetail lock and make the plate lock, you will hear a click. (As shown in Figure 3)

d. The camera and plate can be moved back and forth to adjust the balance (the safety block can prevent the camera from sliding out), fastened and locked. (As shown in Figure 4)

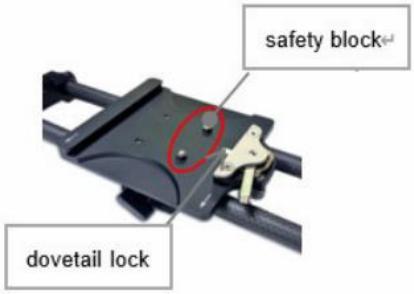

Figure1



Figure 2



Figure 3



Figure 4

3. Camera removal:



Fix the camera with your left hand during the process

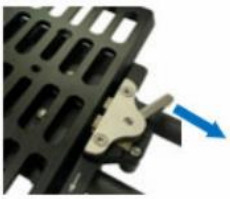

Open the clamping lever, the camera is still fixed by the dovetail lock



Pull down the anti-falling pin of the plate and open the clamping lever. tilt the plate out of the dovetail lock.

Tilt axis adjustment

If you find that the up/down space is insufficient when installing the camera, you can adjust the tilt axis and the up/down position of the handle. Loosen the tilt axis fixing buttons on both sides respectively, adjust as required, and ensure that the scales on both sides are exactly the same. After the adjustment is completed, be sure to tighten the screws on both sides. (This height has been adjusted before leaving the factory, and it is suitable for general camera heights.)

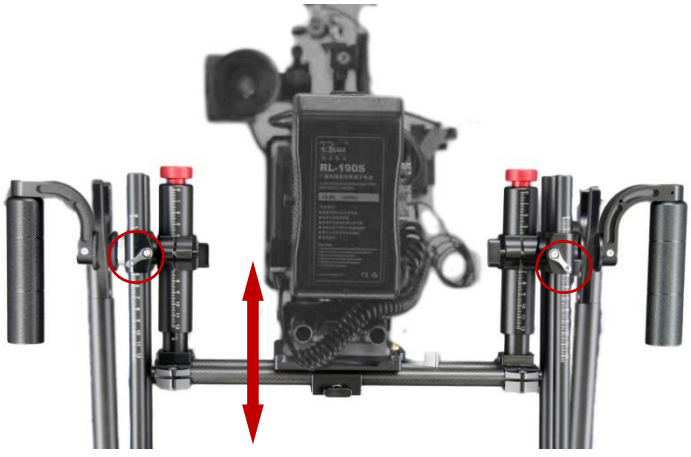

Balance adjustment

In order to achieve the ideal shooting effect for FALCON PTZ, balance adjustment is essential. Precise balance will directly improve the quality of the shooting picture, meantime, make the shooting more labor-saving. Need to adjust the balance of pan and tilt.

Balance adjustment preparation

1. After the camera is installed, please connect all external auxiliary equipment and cables before adjusting the balance.

2. Before adjusting the balance, you need to remove the lens cap and insert the memory card, complete all the connections, and ensure that the camera is fully prepared for shooting, otherwise the balance effect will be affected.

3. In the process of adjusting the balance, make sure that the power of the camera is turned off.

Step1：Tilt axis adjustment

1. Loosen the tilt axis lock, and rotate the left and right adjustment knobs at the same time. Clockwise the camera will be up, and vice versa.

2. After adjusting to a suitable position, lock it tightly. When the camera lens is vertically upward, it can stay steadily, indicating that the balance has been adjusted and the zero-gravity balance has been achieved.



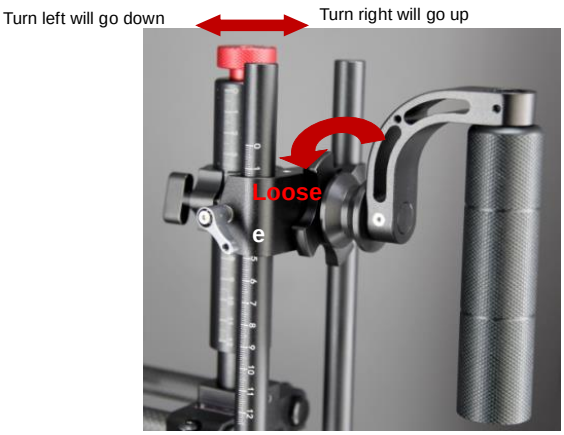

© 2021 鸾翼科技 版权所有

Step2：Roll axis adjustment

1. Pull up the center lock of the pan axis and loose the base fixing button. If the camera tilts to the left, the base moves to the right, otherwise it moves to the left.
2. Tighten the fixing knob. Tilt the camera 45° to the left or right,if the camera can stay steadily, it means that the balance has been adjusted.





© 2021 鸾翼科技 版权所有

Precautions for use：

Safety Use

1. Before using the equipment, check the screws of each connection position are loose or abnormal, and make sure the problem is eliminated before using.

2. Training or shooting difficult actions requires the help and cooperation of an assistant.

3. When shooting on a moving vehicle, please fasten your seat belt and wear appropriate personal protective equipment.

4. Avoid to use the equipment while running on ice and soft sand.

Maintenance

1. After using, the equipment should be disassembled and put it into the box and locked, and placed in a cool and dry place. Don't put it anywhere in case that accessories lost or bumps, affect the use of equipment.

2. Do not place the device in a humid environment or in the hot sun, which will easily deform and damage the internal precision parts.

3. The equipment connection, top stage and component installation place should be kept clean. If there is debris or oil residue on the connection of the equipment, after disconnecting the power, wipe it with a damp cloth dampened with a neutral detergent. Do not wipe with a rough surface or corrosive detergent or scrape with a knife to avoid damage the protective layer of the surface.

Product after-sales service

1. All products sold by our company will provide free installation instructions

2. Laing brand film and television equipment products provide three-year warranty and lifetime maintenance services

3. During the warranty period, non-man-made faults can enjoy free warranty and replacement, and the replenishment time is guaranteed within 15 days

4. During the warranty period, if the product needs to be repaired due to man-made damage, the product can be sent back to the manufacturer for repair, repair fees is free, only the cost of the accessories is charged, and the freight out and home will be on buyer's charge.

© 2021 鸾翼科技 版权所有

This manual is subject to update without notice.
You can check the latest version of "User Manual" on the official website of Laing.

http://www.szlaing.com

© 2021 鸾翼科技 版权所有