CAMERA STABILIZER MASTER II

USER MANUAL



©2024 LAING TECHNOLOGY COPYRIGHT

Reading tips

Instructions for using the product

Please read the following documents carefully to fully understand and use the Master II reasonably and safely.

- 《Master II packing list》
- 《Master II User manual》
- 《Master II Disclaimer and Safe Practice Guidelines》

Please check the "Package List" for all items included in the Master II package. Please read the User Manual carefully and watch the instructional video on the Master II product page of Laing official website. Read the Disclaimer and Safe Practice Guidelines carefully to understand your legal rights and responsibilities. If you have any questions during the installation, use or maintenance of Master II, please contact Laing and its authorized agents.

Contents

Camera stabilizer MASTER II....1
Reading tips....2
Instructions for using the product....2
Contents....3
Product overview....4
Parameters....5
Packing list....5
Know MASTER II....6
Sled overview....6
Top stage....6
Upper wire box....6
Gimbal....7
Bottom part....7
Battery module....7
Vest....8
Arm....9
Docking bracket....9
Installation and operation....10
Sled installation....10
Preparatory steps....10
Battery and Monitor installation....10
Camera installation....11
Sled adjustment....11
Static balance adjustment....11
Dynamic balance adjustment....12
Vest wearing....13
Arm installation and disassembly....14
Arm direction adjustment....14
Spring change....16
Precautions for use....17
Safety instructions....17
Cleaning and maintenance....17
Transport and storage....17

Product overview

Master 2 is a mechanical Steadicam stabilizer. By separating the camera from the operator, the shake is reduced to a negligible level, providing users with a smooth and free shooting experience.

The entire body adopts an industrial standardized solution, using corrosion-resistant metal and replaceable wearing parts. It can cope with various complex weather factors, provide a reliable shooting environment, and help users complete flexible and delicate operations at any time.

Strengthen the modular and provide multiple options for components including but not limited to long, standard and short sled options, universal joint extension handles that can be freely disassembled, and the arm posts can be freely replaced to short or long length to adapt to the different uses, environment and operating habits.

Master 2 is fully integrated with the standards. The sled, arm, and vest can be adapted to the industry's main Steadicam system, making it convenient to use. The new HDMI expansion interface can connect to a wider range of devices and provide users with clearer displays, adapting to the gradually developing connection needs of monitors.

This user manual is intended to introduce the assembly, adjustment, use and maintenance of the Master 2 in detail, to help users fully understand and operate the device correctly. It is recommended that users who want to learn more about the Steadicam system to read "The Steadicam Operator’s Handbook".

©2024 LAING TECHNOLOGY COPYRIGHT

【Parameters】Master II

Item	Parameter
Short sled	460-785 mm
Standard sled	580-1025 mm
Long sled	1110-2085 mm
Power	12v-31.4v
Vest weight	3.8kg
Vest waist circumference	70-150cm
Adapter	5/8 in
Arm payload	2-28kg（Titanium）/4-35kg（Steel）
Arm stroke	740mm
Arm post diameter	5/8 in（1/2 in、3/4 in can be optional）
Arm net weight	4.1kg

【Packing list】Master II

Item	Name	Unit	Qty	Notes	
1	Sled	pc	1		
2	Vest	pc	1		
3	Arm	pc	1		
4	Docking bracket	pc	1		
5	Low mode bracket	pc	1		
6	Steel spring	pc	2		
7	D-TAP	pc	2		Accessory bag
7	SDI	pc	2		
8	D-TAP to lemo 8 pin Arri camera power cable	pc	1		
9	HDMI 2.1	pc	2		
10	D-TAP 1 connector 4	pc	1		
11	Weights	pc	4	3/8-0.25kg	
12	Safety case	pc	1	87x27x60(cm)	

©2024 LAING TECHNOLOGY COPYRIGHT

KNOW MASTER II

Sled overview

Top stage



1. Quick release plate
2. Front and rear fine adjustment knob
3. Left and right fine adjustment knob
4. 60mm xDia.15mm
5. Clamping screw
6. Cold shoe slot
7. Clip can be customized into different sizes

Upper wire box

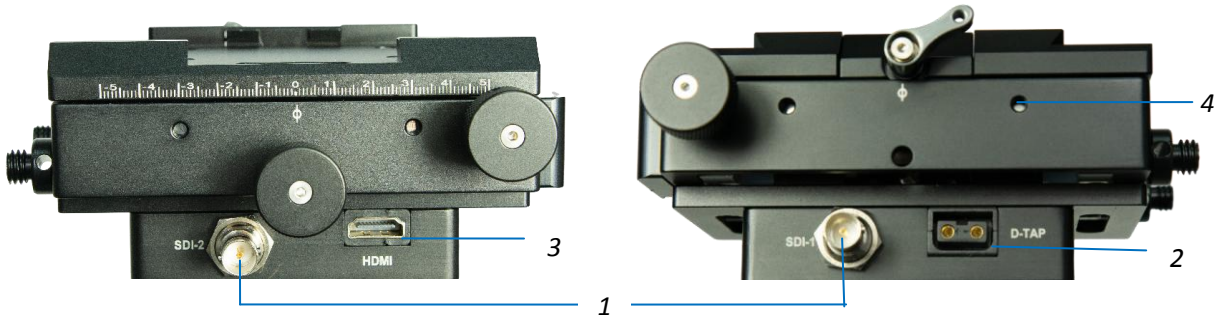

1. SDI Port (Video signal interface)
2. D-TAP Port(High current power interface)
3. HDMI Port (Video signal interface)
4. Navigation adjustment scre

Gimbal

1. Bearing retaining ring
2. Gimbal bracket
3. Handle(Combined and disassembly type),connector 5/8 in
4. Armrest
5. Holding ring adjustment screw



Extension handle

The gimbal handle is a replaceable part and can be adjusted to a suitable length according to personal habits.



1. Hold the gimbal bracket, then firmly turn the handle counterclockwise.
2. Tighten the extension handle to the original handle.
3. Hold the gimbal bracket and turn the extension handle clockwise.

Bottom part

1. Clamping knob
2. Monitor bracket
3. Rotating shaft
4. Locking button
5. Rod
6. Rod locking button
7. Battery rod locking button
8. Battery rod
9. Rotating shaft for battery bracket
10. Locking button
11. V-mount：12v-15.7v（left）24v-31.4v（middle）12v-15.7v（right）

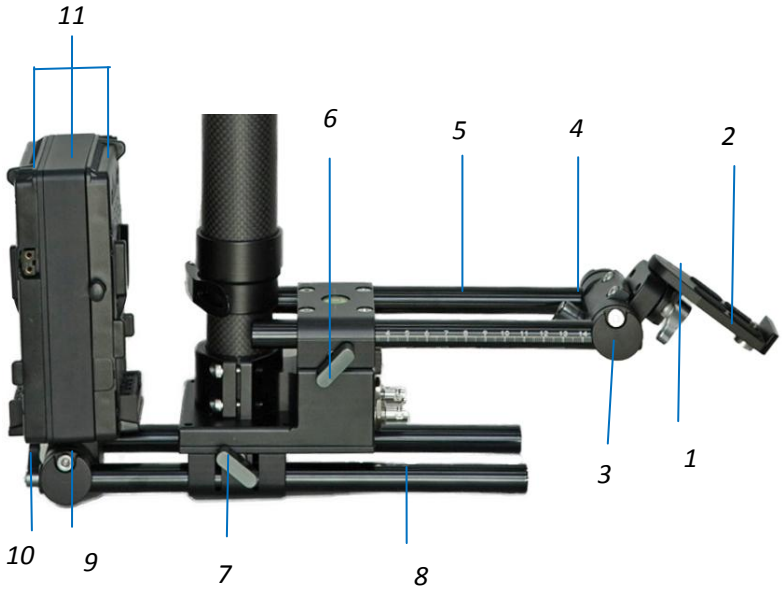

Battery module

1.Weights connector
2. Vertical adjustment knob
3.60mm x15mm ϕ rod connector
4. Horizontal adjustment knob



©2024 LAING TECHNOLOGY COPYRIGHT

Vest

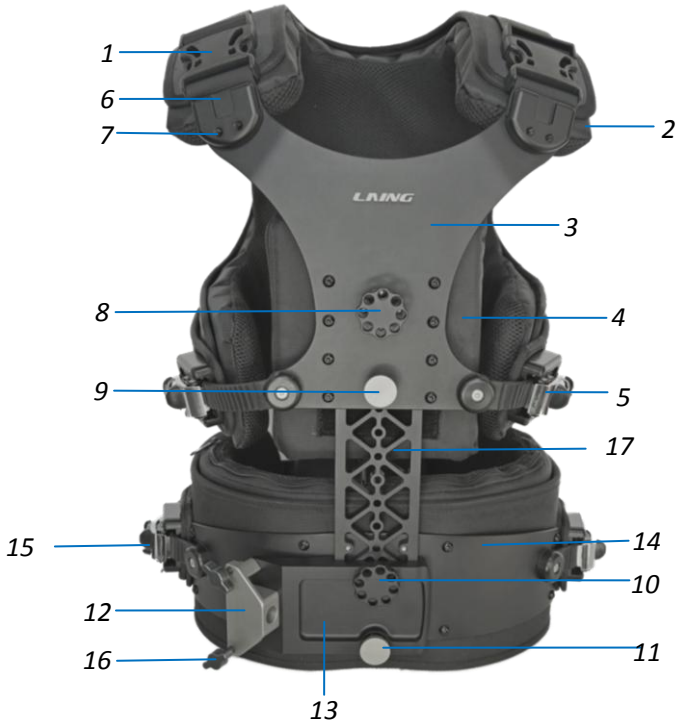

1. Buckle
2. Shoulder pad
3. Chest plate
4. Chest pad
5. Button
6. Cold shoe slot
7. 1/4 in
8. Fixed length button
9. Positioning button
10. Connecting plate fixing knob
11. Connecting plate positioning pin
12. Socket
13. Connecting plate
14. Front waist panel
15. Waist buckle
16. Front and rear knob
17. Vertical plate

18.Waist pad
19.Belt



Arm

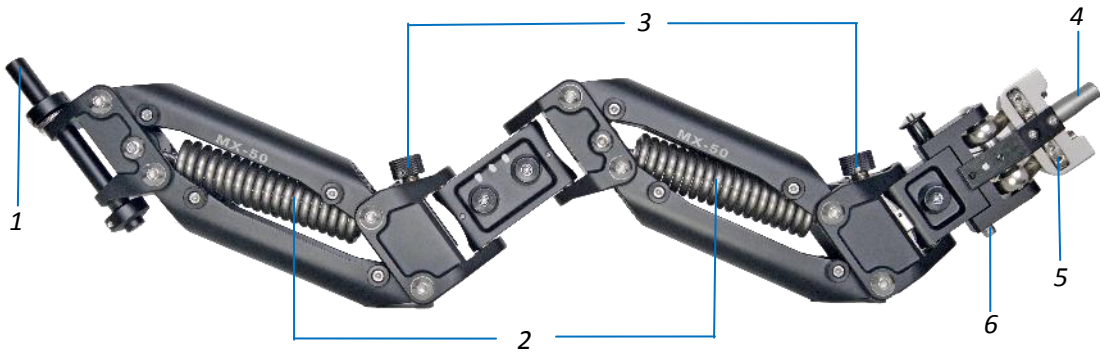

1. Arm post 5/8（1/2、3/4）in
2. Spring（Titanium spring、Steel spring）
3. Adjustment knob
4. Plug 5/8 in
5. Left and right fine adjustment nuts
6. Pin ϕ10
7.

Docking bracket

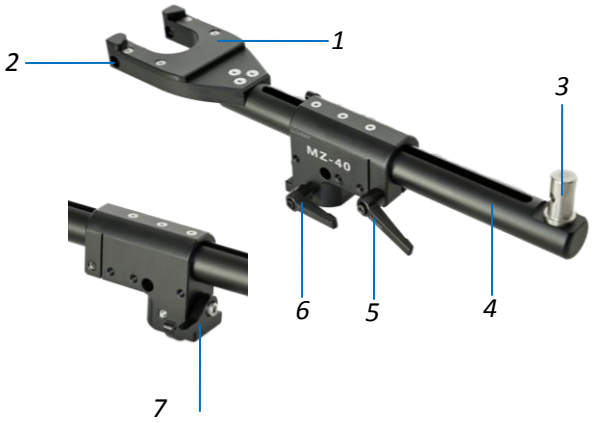

1.Bracket plate
2.Pin hole
3.Balance adjustment pin
4.Balance adjustment rod
5.Rod Locking screw
6. Pin Locking screw
7. Telescopic hook

Low mode bracket



©2024 LAING TECHNOLOGY COPYRIGHT

Installation and Operation

Sled installation

Preparatory steps

Place the sled and arm to the docking bracket.

1. Open the tripod and place it on the ground, then insert the docking bracket into the bracket pin and tighten the screw.
2. Take out the sled and place it on the docking bracket support plate, and hang the arm to the telescopic hook.





Battery and monitor installation

The installed battery and monitor are optional accessories (need to be purchased by users)

There are two kinds of Monitor brackets to be chosen, one is standard brackets and the other one is U-shaped brackets.

Standard bracket: Align the screw holes at the bottom of the monitor with the interface screws at the bottom of the monitor bracket, and tighten to fix;

U-shaped bracket: Align the screw holes on both sides of the monitor with the interface screws on both sides of the monitor bracket, and tighten them.

Align the V-shaped latch port at the bottom of the battery with the V-shaped slot and push it in gently until you hear a "click" sound. The battery and monitor also serve as weight balances, so you can choose the placement method as needed during the balance adjustment process.



Camera installation

1. Firstly, loosen the clamping screw on the quick release plate and take out the quick release plate;
2. Lock the quick-release plate on the bottom of the camera, then install the quick-release plate to the top stage, making the center of gravity consistent with the sled's as much as possible, and lock the clamping screws;

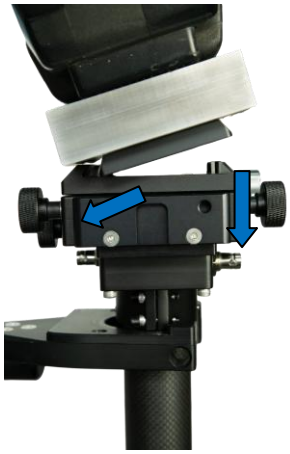

3. Finish connecting the signal wire and camera power cable, and wrap up the long cable to avoid affecting balance and operation.。

Sled adjustment

In order to achieve ideal shooting effects, balance adjustment is crucial. Precise balance will directly improve the quality of the shot. Before shooting, the stabilizer must achieve static balance and dynamic balance. Sled that achieves static balance usually stands vertically on a stand and is balanced in three directions: up and down, front and back, left and right with the gimbal as the center.
Before adjusting the sled, you need to ensure that all equipment is installed and connected, remove the lens cover, and insert the memory card to allow the machine to enter a fully prepared state. Avoid weight gain or loss after the balance adjustment is completed.

Static balance adjustment

Lift the sled from the bracket plate, align the gimbal handle with the balance adjustment pin and insert it to start adjustment.
1. Adjust the lower rod to a length that is convenient for control, and then adjust the monitor to a position where it can be easily seen;
2. Adjust the position of the gimbal through the drop test. After rotating the sled to a horizontal position, let it go and fall freely, then roughly calculate the time for the sled falling to the bottom. Normally, try to keep the falling time within 2-3 seconds;
3. If the falling time is too fast, it means that the weight at the bottom is greater than the weight at the top, so keeping the sled horizontally, loosen the gimbal holding ring and gently push the rod towards the camera side; otherwise, push it to the other side, then tighten the holding ring and test the falling time again, adjust it repeatedly until the weight on both sides is appropriate

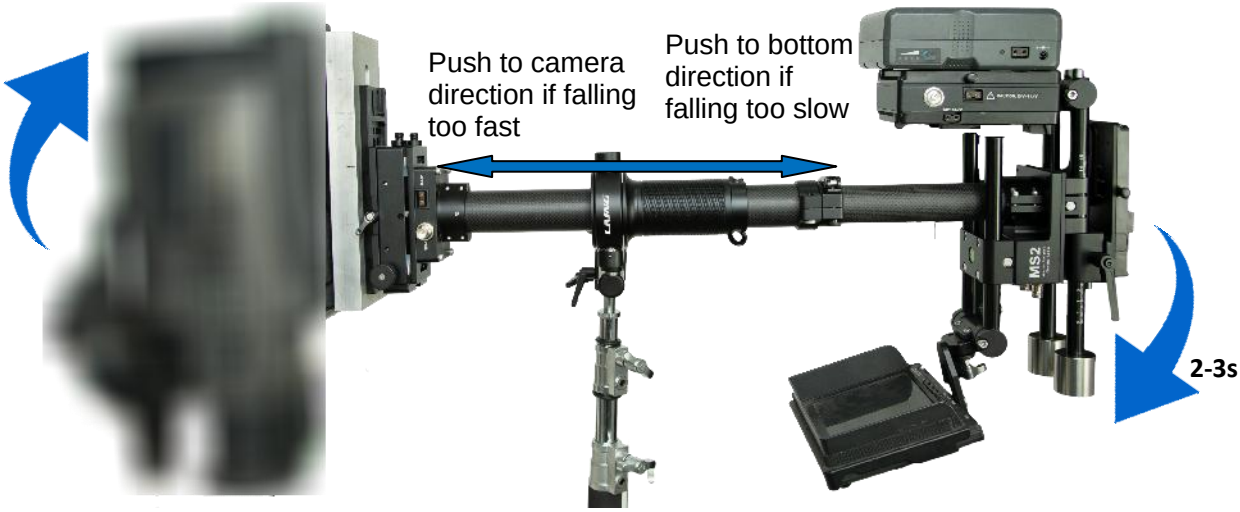

4. Watching the horizontal bubble at the bottom, at the same time, using the fine-tuning knob on the top stage. When the horizontal bubble is in the center circle and is no longer shaking, that means the static balance state is reached.

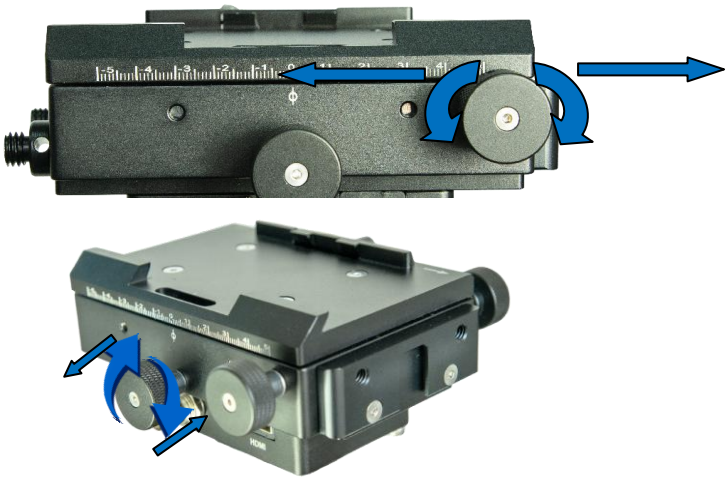

Dynamic balance adjustment

When the dynamic balance state is reached, there will be no shaking no matter how fast the rotation is. When dynamic balance is achieved, static balance must also be achieved, but being in a static balance state, it doesn't mean a dynamic balance state.

1. The monitor, battery and other components are arranged on the same vertical plane;



©2024 LAING TECHNOLOGY COPYRIGHT

2. Adjust to the static balance state and keep the falling time at 2-3 seconds;
3. Gently pinch the gimbal armrest and make it rotate by itself, and watch whether it can rotate smoothly. If not, please see the next step;



4. Loosen the locking button of the battery holder rod, push it inward/outside 1/2 inch and then lock it, adjust it to the static balance state again, and watch whether its rotation is stable. If it is more stable, continue to push 1/4 in to the same side; if it is more wobbly, push to the other side 1/2 in from the original position. Continue to adjust to static balance and watch whether the rotation is stable;

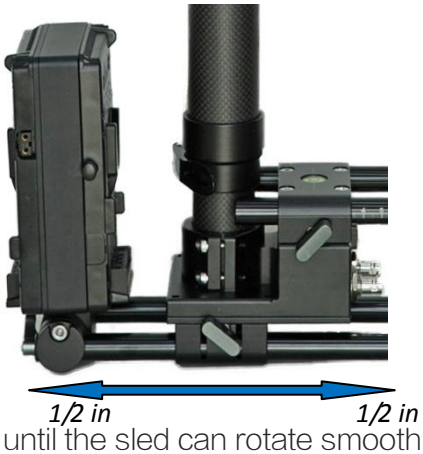

5. Repeat the above steps until the sled can rotate smoothly vertical to the ground.

Vest wearing



According to users' demand, you can add or reduce padding and lengthen or shorten the straps to achieve a better fit.

1. Loosen the waist buckle, chest buckle and back strap, and insert the buckles on both sides of the shoulder;
2. Grasp the shoulder straps with both hands and pull the vest over your head;
3. Adjust the chest strap to a suitable height through the buttons on the chest panel, then buckle the chest strap close to your ribs and tighten the chest buckle;

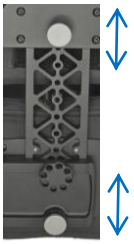

4. Loosen the Velcro on the back of the shoulder strap, tighten it to fit your shoulders and stick it in place;
5. Use the velcro to adjust both sides of the waist pad to a suitable length, and use the waist buckle to connect the back waist pad and the front waist panel

6. Slightly tighten your abdomen, make the vertical board perpendicular to the ground, and rest the vest on your hips and buttocks. Tighten all the connecting straps again, buckle the straps behind your waist and tighten them.

Note: For your health, use your waist to bear the weight as much as possible. The function of the shoulders is to fix the vest so that it does not drift during exercise.

Arm installation and disassembly

1. First insert the plug of the arm into the socket on the vest, and tighten the nuts on both sides of the socket;

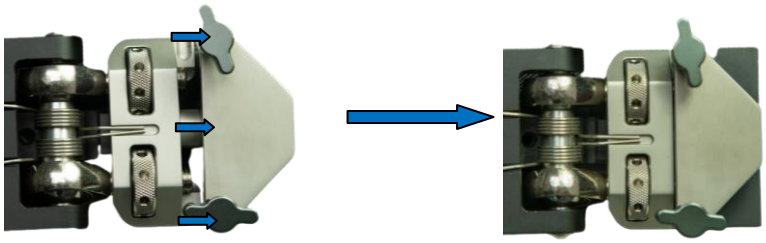

2. Then hold the arm with both hands, with the arm post at the top and the plug at the bottom. Align the plug with the gap of the block and insert it accurately;
3. Half-lean the arm against your body, slightly lift the arm with one hand, and insert the pin into the connection hole.



Note: The pin can be easily inserted only when the angle between the connecting block and plug is consistent.

Arm direction adjustment

The arm balance needs to be adjusted before connecting to the sled so that it can be placed in front of you smoothly without load.

1. Adjust the left and right balance of the arm through the knobs on both sides of the socket. When the arm tilts to the right, turn the top knob counterclockwise to straighten it; when the arm tilts to the left, turn the bottom knob counterclockwise;

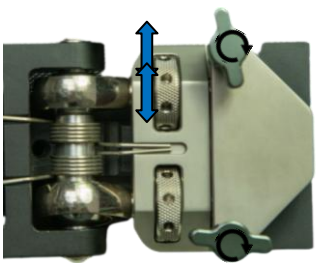

2. Adjust the front and rear balance of the arm through the knob on the socket. When the arm tilts away from the user, unscrew the bottom knob; when the arm leans toward the user, unscrew the top knob; After the arm rests in front of you and does not move, start installing the sled;
3. Lean your body forward in a half-squat, connect the arm post with the gimbal handle successfully. Then hold the gimbal handle, stand upright and lift the sled rely on the power of the arm;
4. Hold the gimbal and press it down or lift it up to make the arm at horizon. Then follow the instructions on the load knob. Increase the load can raise the arm. Decrease the load can lower the arm. Finally, make the arm's front and rear parts reach a nearly horizontal state to complete the adjustment.



Front arm



Rear arm

Spring change

1. Firstly, adjust the load knob of the arm clockwise to the maximum ,and the side of the spring which is close to the knob rises to the top;



2. Then use your fingers to turn the locking screw on the other side of the spring to loosen it (turn it counterclockwise). During the loosening process, use your other hand to hold down the spring to prevent it from rotating with the screw. You can also change the opening angle of the arm to obtain a space that is convenient for movement until the opening angle of the arm reaches 180°;

3. Release the other side of the spring. Put your hand into the arm and turn the spring counterclockwise until the spring is completely removed;

4. While installing the spring, please note that there is an 8mm small hole on one side of the spring and a 10mm larger hole on the other side. Align the large hole with the screw on the side of the load adjustment knob, and turn the spring clockwise until there is about 6 thread gaps left;



5.Install the other side of the spring. By adjusting the opening angle of the arm, align the screw on the other side with the small hole. Turn the screw clockwise with one hand, and press the spring with the other hand to prevent it from rotating with the screw until the opening angle of the spring is against the anti-collision pad and the screws are tightened to complete the installation.

Precautions for use

Safety instructions

1. Before using the equipment, check whether the screws at each connection position is loose or abnormal, and ensure that the problem is eliminated before use.
2. When training or shooting difficult movements, you need the help and cooperation from an assistant.
3. When shooting on a moving vehicle, please fasten your seat belt and wear appropriate personal protective equipment.

Cleaning and maintenance

1. Regularly add lubricating oil to the mechanical connection points.



Gimbal connection



Spring connection

2. After use, the equipment should be disassembled and completely placed in the case, locked, and placed in a cool and dry place. Do not leave it anywhere;

3. Before cleaning, remove camera accessories from the device and disconnect all cables.

4. Clean the parts with a soft cleaning cloth and water or detergent. Do not use strong or corrosive cleaners such as methanol and acetone. These chemicals may dissolve parts surface.

Transport and storage

1. Unplug all cables before transporting;

2. Transport and store in suitable cases;

3. Do not store the device in a humid environment or under the scorching sun.

After sale service

1. All products sold by our company provide free installation guidance
2. Laing film and television equipment products provide three-year warranty and

lifetime maintenance services

3. During the warranty period, if the failure is not caused by human factors, you can enjoy free warranty and replacement, and the replenishment time is guaranteed to be within 15 days.

4. During the warranty period, if the product needs to be repaired due to man-made damage, the product can be sent back to the manufacturer for repair. The seller won't charge the maintenance fee and only charge the cost of the accessories. The buyer need pay for the round trip freight cost.

©2024 LAING TECHNOLOGY COPYRIGHT

This manual is subject to updates without prior notice.

You can check the latest version of the User Manual on the official website of laing.

http://www.szlaing.com